SWISS-PARK

A LÖDIGE INDUSTRIES COMPANY

STACK PARKER - S2.7

Maximum efficiency

Technical data sheet

- ✓ CE certified
- ✓ Space saving
- ✓ Independent parking
- ✓ Low maintenance cost
- ✓ Flexible parking
- ✓ Low noise

Lödige Industries GmbH | Balhorner Feld 1 | 33106 Paderborn
Telefon: +49 5251 2980-0 | E-Mail: info@lodige.com
www.lodige.com

SWISS-PARK
A LÖDIGE INDUSTRIES COMPANY

S2.7 (S2.7-R)
▶ Stack Parker

Dimensions

- All dimensions specified are the minimum, finished dimensions.
- Tolerances for the dimensions $^{+3}_{0}$. (1)
- Dimensions are in cm.

Standard passenger car (L)

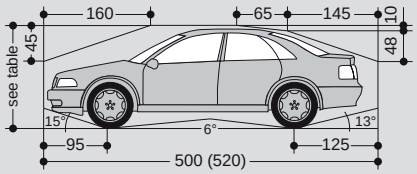

Standard station wagon (K)

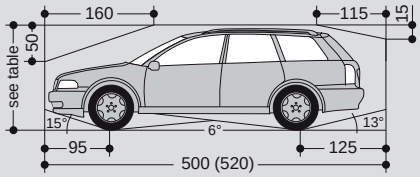

Standard passenger cars are vehicles without any sports options such as spoilers, low-profile tires, etc.

Parking possibilities

	Standard S2.7	Reinforced S2.7-R
Width in cm	190 (2)	190 (2)
Weight in kg	max. 2000	2600
Wheel load in kg	max. 500	650

Height dimensions

All pit and height variants can be found on page 2.

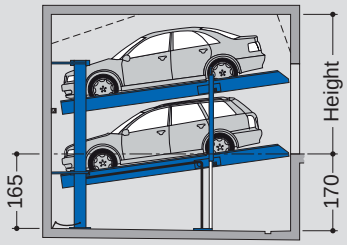

Smallest version

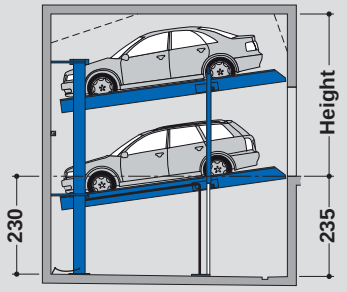

Largest version

▶ Specification

- EB (single platform) = 2 vehicles
- DB (double platform) = 4 vehicles
- Independent parking
- Horizontal access to all parking levels
- Car heights = 150 cm to 210 cm
- Car length = 500 cm to 520 cm
- **S2.7 (Standard) :** Load capacity = 2000 kg per parking place, Usable platform width up to 270 cm for EB and up to 530 cm for DB
- **S2.7-R (Reinforced) :** Load capacity = 2600 kg per parking place. Usable platform width up to 270 cm for EB and up to 540 cm for DB

▶ Garage without door

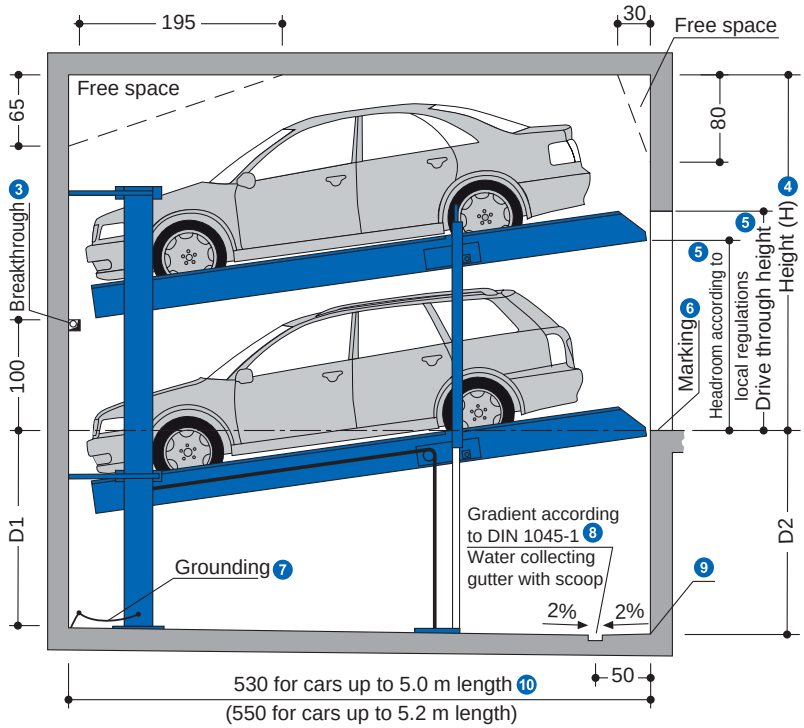

▶ Notes

(1) To comply with the minimum finished dimensions, the tolerances according to VOB, Part C (DIN 18330 and 18331) and DIN 18202 must also be considered.
(2) Car width for platform width 230 cm. For the greatest possible ease-of-use, we recommend
a) S2.7 - platform widths of 250 to 270 cm (EB) or 500 cm (DB).
b) S2.7-R - platform widths of 260 to 270 cm (EB) or of 510 to 540 cm (DB).
(3) For dividing walls: cutting through 10 x 10 cm.
(4) If a higher ceiling height is available, higher cars can be parked.
(5) Must be at least as high as the greatest car height + 5 cm.
(6) In compliance with DIN EN 14010, 10 cm wide yellow-black markings compliant to ISO 3864 must be applied by the customer to the edge of the pit in the entry area to mark the danger zone (see "**Load plan**", page 6).
(7) Grounding of the system to be connected to the central grounding on-site (to be provided by the customer).
(8) Slope with drainage channel and sump.
(9) At the transition section between the pit floor and walls, no hollow mouldings/coves are possible. If hollow mouldings/coves are required, the systems must be designed smaller or the pits accordingly wider.
(10) For cars up to a length of 5.30 m, we recommend a pit length of 5.50 m.

Page 1 Sections, dimensions, car data
Page 2 Variants and Height dimensions
Page 3 Width dimensions
Page 4 Garage door dimensions
Page 5 Parking position, Approach, Wall clearance
Page 6 Load plan, Space for duct installation
Page 7 Installation data / electrical installation
Page 8 Technical hint
Page 9 Facilities from customer
Page 10 Description EB + DB

Lödige Industries GmbH | Balhorner Feld 1 | 33106 Paderborn
Telefon: +49 5251 2980-0 | E-Mail: info@lodige.com
www.lodige.com

▶ Overview of stack parker variants and building heights

S2.7-165

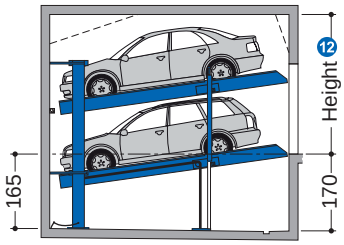

Height	Car height	
	top	below
290	150 (L)	150 (L+K)
305	150 (L+K)	150 (L+K)

S2.7-170

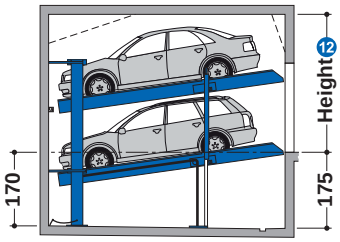

Height	Car height	
	top	below
295	150 (L)	155 (L+K)
310	150 (L+K)	155 (L+K)
300	155 (L)	155 (L+K)
315	155 (L+K)	155 (L+K)

S2.7-175

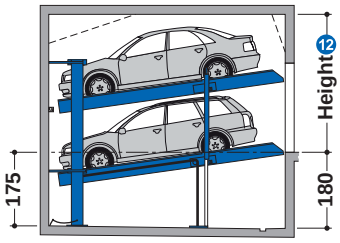

Height	Car height	
	top	below
300	150 (L)	160 (L+K)
315	150 (L+K)	160 (L+K)
310	160 (L)	160 (L+K)
325	160 (L+K)	160 (L+K)

S2.7-180 11

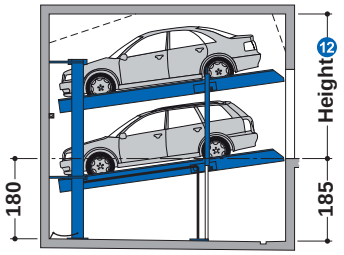

Height	Car height	
	top	below
305	150 (L)	165 (L+K)
320	150 (L+K)	165 (L+K)
320	165 (L)	165 (L+K)
335	165 (L+K)	165 (L+K)

S2.7-185

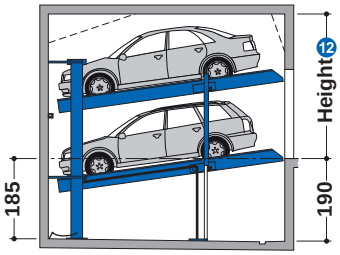

Height	Car height	
	top	below
310	150 (L)	170 (L+K)
325	150 (L+K)	170 (L+K)
330	170 (L)	170 (L+K)
345	170 (L+K)	170 (L+K)

S2.7-190

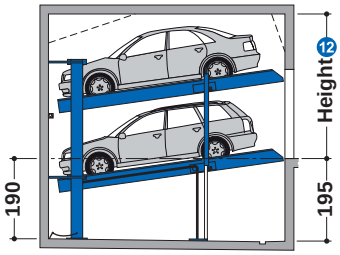

Height	Car height	
	top	below
315	150 (L)	175 (L+K)
330	150 (L+K)	175 (L+K)
340	175 (L)	175 (L+K)
355	175 (L+K)	175 (L+K)

S2.7-195 11

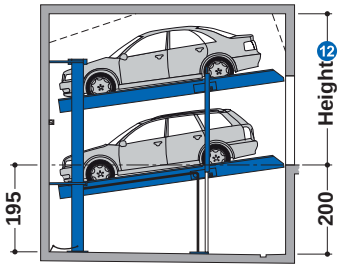

Height	Car height	
	top	below
320	150 (L)	180 (L+K)
335	150 (L+K)	180 (L+K)
350	180 (L)	180 (L+K)
365	180 (L+K)	180 (L+K)

S2.7-205

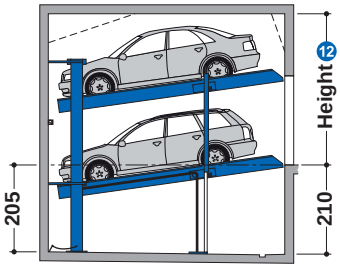

Height	Car height	
	top	below
330	150 (L)	190 (L+K)
345	150 (L+K)	190 (L+K)
370	190 (L)	190 (L+K)
385	190 (L+K)	190 (L+K)

S2.7-215

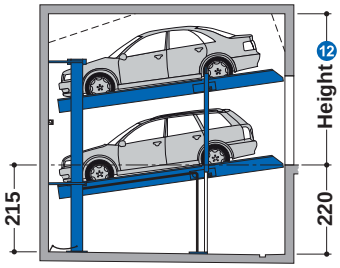

Height	Car height	
	top	below
340	150 (L)	200 (L+K)
355	150 (L+K)	200 (L+K)
390	200 (L)	200 (L+K)
405	200 (L+K)	200 (L+K)

S2.7-220 11

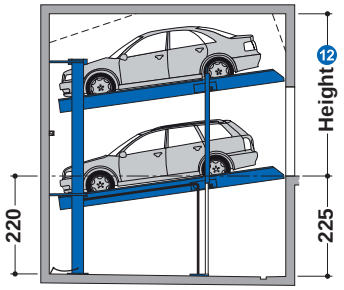

Height	Car height	
	top	below
345	150 (L)	205 (L+K)
360	150 (L+K)	205 (L+K)
400	205 (L)	205 (L+K)
415	205 (L+K)	205 (L+K)

S2.7-230

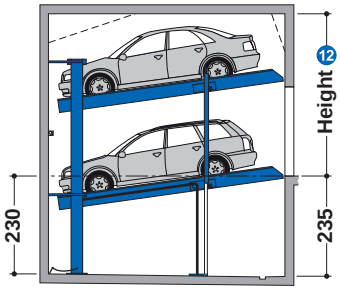

Height	Car height	
	top	below
355	150 (L)	215 (L+K)
370	150 (L+K)	215 (L+K)
420	215 (L)	215 (L+K)
435	215 (L+K)	215 (L+K)

11 Standard type
12 If the ceiling height is higher, correspondingly higher vehicles can be parked on the top.

Page 1 Sections, dimensions, car data
Page 2 Variants and Height dimensions
Page 3 Width dimensions
Page 4 Garage door dimensions
Page 5 Parking position, Approach, Wall clearance
Page 6 Load plan, Space for duct installation
Page 7 Installation data / electrical installation
Page 8 Technical hint
Page 9 Facilities from customer
Page 10 Description EB + DB

Lödige Industries GmbH | Balhorner Feld 1 | 33106 Paderborn
Telefon: +49 5251 2980-0 | E-Mail: info@lodige.com
www.lodige.com

Page 1 Sections, dimensions, car data
Page 2 Variants and Height dimensions
Page 3 Width dimensions
Page 4 Garage door dimensions
Page 5 Parking position, Approach, Wall clearance
Page 6 Load plan, Space for duct installation
Page 7 Installation data / electrical installation
Page 8 Technical hint
Page 9 Facilities from customer
Page 10 Description EB + DB

▶ Width dimensions for garage without door

Dividing walls

Single platform (EB)

Usable platform width	Garage width **B1**
230	260
240	270
250	280
260	290
270	300

Double platform (DB)

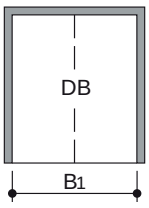

Usable platform width	Garage width **B1**
460	490
470	500
480	510
490	520
500	530
510*	540
520*	550
530*	560
540*	570

*only S2.7-R

Single and double platform (EB + DB) – Example

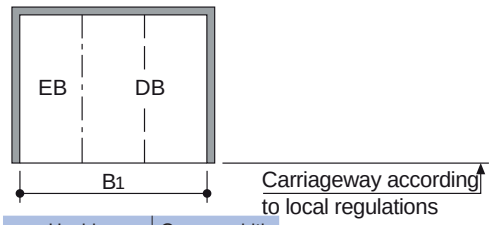

Usable platform width	Garage width **B1**
230 + 460	750
240 + 470	770
250 + 480	790
250 + 500	810
270 + 500	830
270 + 510*	840
270 + 520*	850
270 + 530*	860
270 + 540*	870

*only S2.7-R

Columns in pit

Single platform (EB)

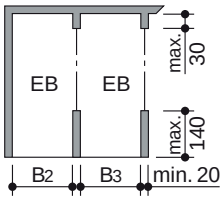

Usable platform width	Garage width	
	B2	**B3**
230	255	245
240	265	255
250	275	265
260	285	275
270	295	285

Double platform (DB)

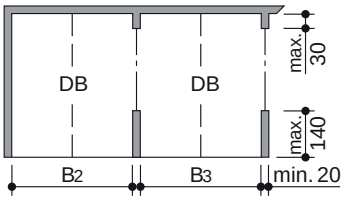

Usable platform width	Garage width	
	B2	**B3**
460	485	475
470	495	485
480	505	495
490	515	505
500	525	515
510*	535	525
520*	545	535
530*	555	545
540*	565	555

*only S2.7-R

Single and double platform (EB + DB) – Example

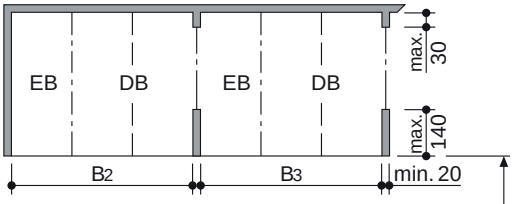

Usable platform width	Garage width	
	B2	**B3**
230 + 460	745	735
240 + 470	765	755
250 + 480	785	775
250 + 500	805	795
270 + 500	825	815
270 + 510*	835	825
270 + 520*	845	835
270 + 530*	855	845
270 + 540*	865	855

*only S2.7-R

Columns outside pit

Single platform (EB)

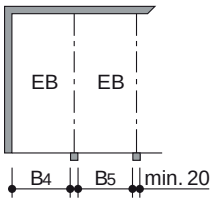

Usable platform width	Garage width	
	B4	**B5**
230	250	240
240	260	250
250	270	260
260	280	270
270	290	280

Double platform (DB)

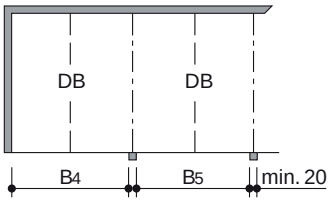

Usable platform width	Garage width	
	B4	**B5**
460	480	470
470	490	480
480	500	490
490	510	500
500	520	510
510*	530	520
520*	540	530
530*	550	540
540*	560	550

*only S2.7-R

Single and double platform (EB + DB) – Example

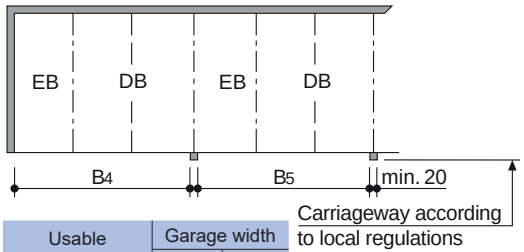

Usable platform width	Garage width	
	B4	**B5**
230 + 460	740	730
240 + 470	760	750
250 + 480	780	770
250 + 500	800	790
270 + 500	820	810
270 + 510*	830	820
270 + 520*	840	830
270 + 530*	850	840
270 + 540*	860	850

*only S2.7-R

HINT : End parking spaces are generally more difficult to drive into. Therefore, we recommend for end parking spaces our wider platforms. Parking on standard width platforms with larger vehicles is difficult. This depends on the type of vehicle, approach and above all on the individual driver´s skill. For maximum comfort, we generally recommend our maximum platform widths of 270 cm for a single platform (EB) and 540 cm for a double platform (DB).

Lödige Industries GmbH | Balhorner Feld 1 | 33106 Paderborn
Telefon: +49 5251 2980-0 | E-Mail: info@lodige.com
www.lodige.com

Page 1 Sections, dimensions, car data
Page 2 Variants and Height dimensions
Page 3 Width dimensions
Page 4 Garage door dimensions
Page 5 Parking position, Approach, Wall clearance
Page 6 Load plan, Space for duct installation
Page 7 Installation data / electrical installation
Page 8 Technical hint
Page 9 Facilities from customer
Page 10 Description EB + DB

▶ Garage with door

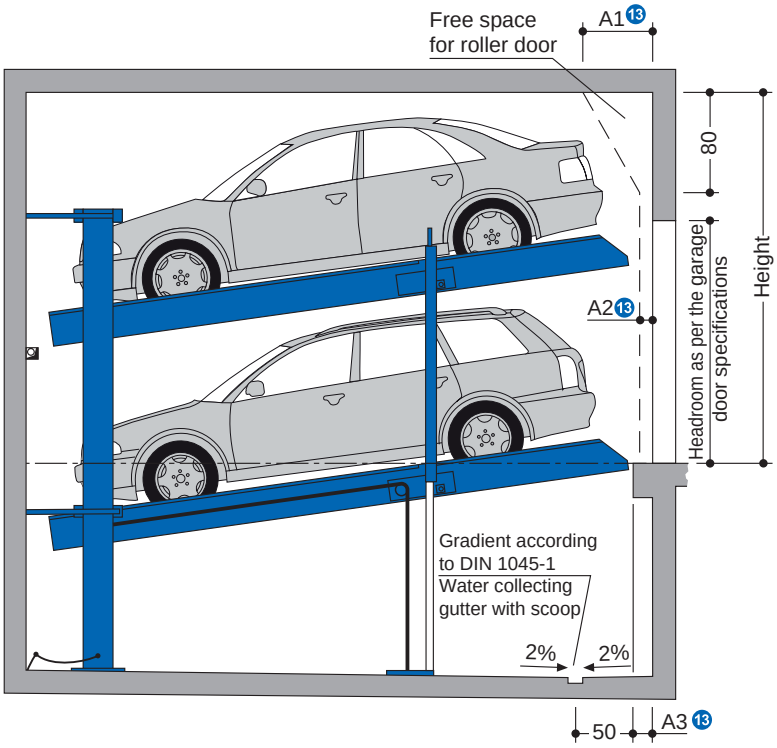

13 Dimensions A1, A2 and A3 must be coordinated with the door supplier.
For all-roller doors, coordination between the door manufacturer and **Lödige Industries** is necessary.

▶ Width dimensions for garage with door

Single platform (EB)

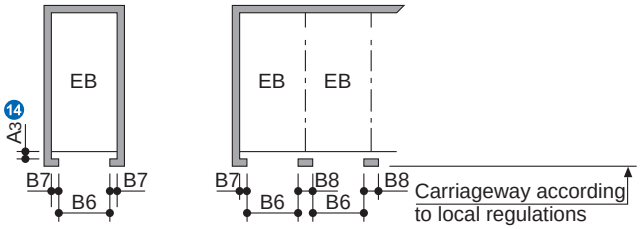

Usable platform width	Door entrance width **B6**	**B7**	**B8**
230	**230**	15	30
240	**240**	15	30
250	**250**	15	30
260	**260**	15	30
270	**270**	15	30

Double platform (DB)

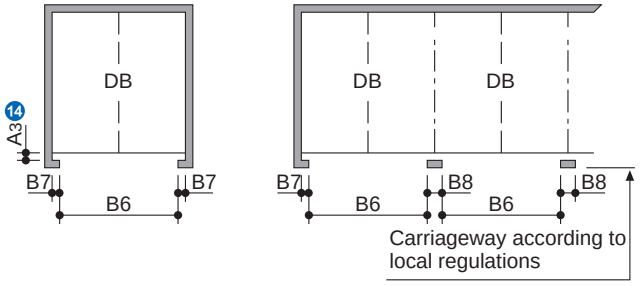

Usable platform width	Door entrance width **B6**	**B7**	**B8**
460	**460**	15	30
470	**470**	15	30
480	**480**	15	30
490	**490**	15	30
500	**500**	15	30
510	**510**	15	30
520	**520**	15	30
530	**530**	15	30
540	**540**	15	30

14 Dimensions A1, A2 and A3 must be coordinated with the door supplier.
For all-roller doors,coordination between the door manufacturer and **Lödige Industries** is necessary.

HINT : End parking spaces are generally more difficult to drive into. Therefore, we recommend for end parking spaces our wider platforms. Parking on standard width platforms with larger vehicles is difficult. This depends on the type of vehicle, approach and above all on the individual driver´s skill. For maximum comfort, we generally recommend our maximum platform widths of 270 cm for a single platform (EB) and 540 cm for a double platform (DB).

Lödige Industries GmbH | Balhorner Feld 1 | 33106 Paderborn
Telefon: +49 5251 2980-0 | E-Mail: info@lodige.com
www.lodige.com

▶ Parking position

System raised

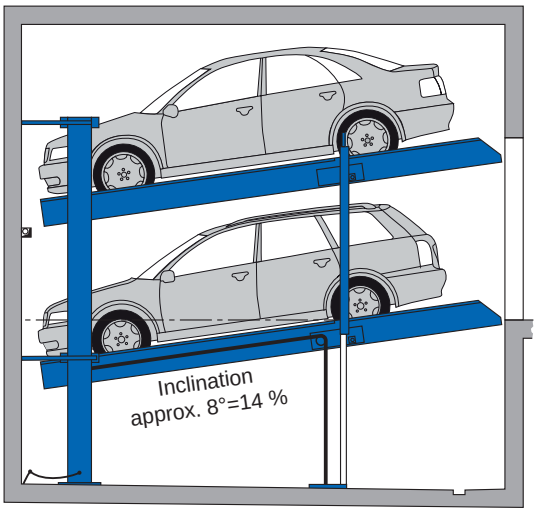

System lowered

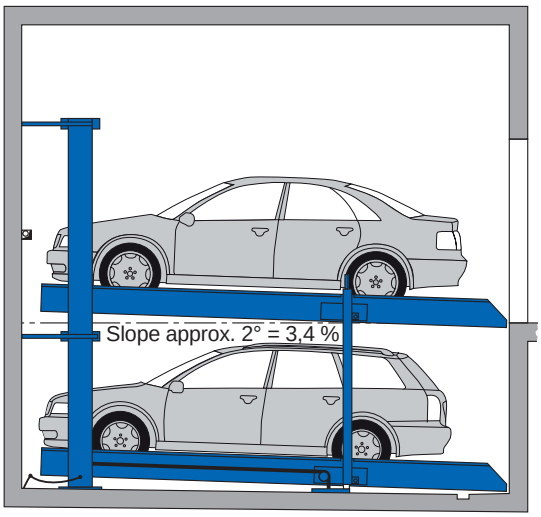

▶ Approach

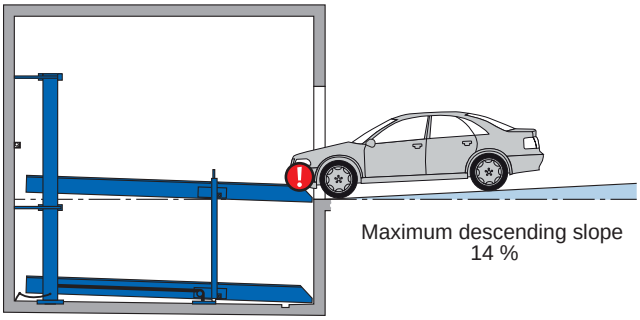

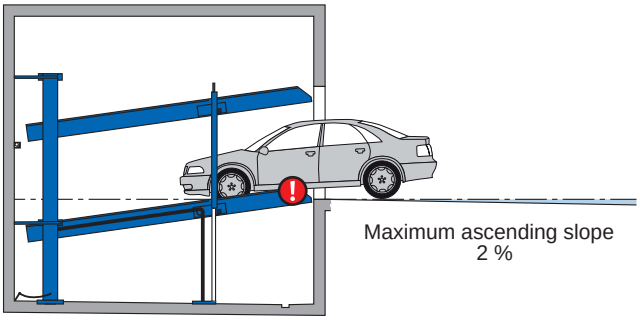

The illustrated maximum approach angles must not be exceeded.

Incorrect approach angles will cause serious maneuvering and positioning problems on the parking system for which the company **Lödige Industries** accepts no responsibility.

▶ Wall clearance

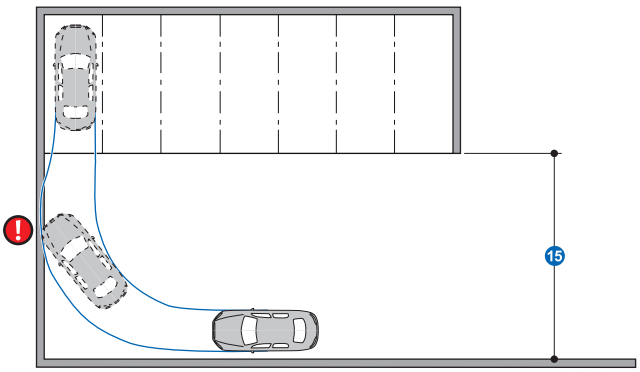

We recommend platform widths of a minimum of 250 cm and driving lane widths of 650 cm so that vehicles can comfortably enter and leave the **swiss-park**-systems without difficulty

Narrower platforms may impede parking according to the following criteria.

- Driving lane width
- Entrance conditions
- Vehicle dimensions

15 Observe minimum driving lane width in accordance with local regulations!

Page 1 Sections, dimensions, car data
Page 2 Variants and Height dimensions
Page 3 Width dimensions
Page 4 Garage door dimensions
Page 5 Parking position, Approach, Wall clearance
Page 6 Load plan, Space for duct installation
Page 7 Installation data / electrical installation
Page 8 Technical hint
Page 9 Facilities from customer
Page 10 Description EB + DB

Lödige Industries GmbH | Balhorner Feld 1 | 33106 Paderborn
Telefon: +49 5251 2980-0 | E-Mail: info@lodige.com
www.lodige.com

▶ Load plan

- The stack parker systems are anchored into the ground. The drill hole depth on the floor is approx. 15 cm, and on the walls approx. 12 cm.
- Floor and walls below the drive-in level must be made of concrete (concrete quality min. C20/25)!
- The dimensions of the load-bearing points are approximate. If the exact dimensions are required, please consult **Lödige Industries.**

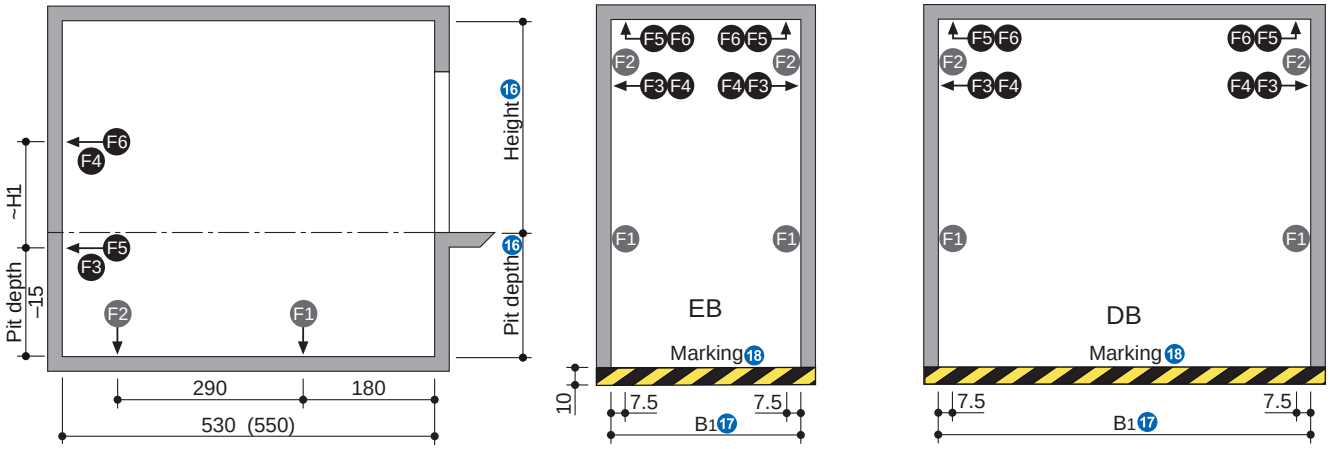

Platform load	Force (kN)					
	F1	F2	F3	F4	F5	F6
EB 2000 kg	+28 -1,7	+12	±1	±0,8	±1,9	±1,9
EB 2600 kg	+36 -2,2	+15	±1,3	±1	±2,4	±2,4
EB 3000 kg	+42 -2,4	+17	±1,5	±1,2	±2,7	±2,7
DB 2000 kg	+51 -6,7	+20	±1,6	±2,6	±3,4	±3,4
DB 2600 kg	+67 -8,6	+26	±2,1	±3,4	±4,4	±4,4

Type	H1
S2.7-165	150
S2.7-170	155
S2.7-175	160
S2.7-180	165
S2.7-185	170
S2.7-190	175
S2.7-195	180
S2.7-205	190
S2.7-215	200
S2.7-220	205
S2.7-230	215

16 Height dimensions (see **"Overview of stack parker varients and building heights"**, Page 2)
17 Width dimension B1 (see **"Width dimensions for garage with/without door"**, Page 3 and 4)
18 Marking in accordance with DIN EN 14010 (illustration colours are not consistent with DIN ISO 3864)

▶ Space for duct installation

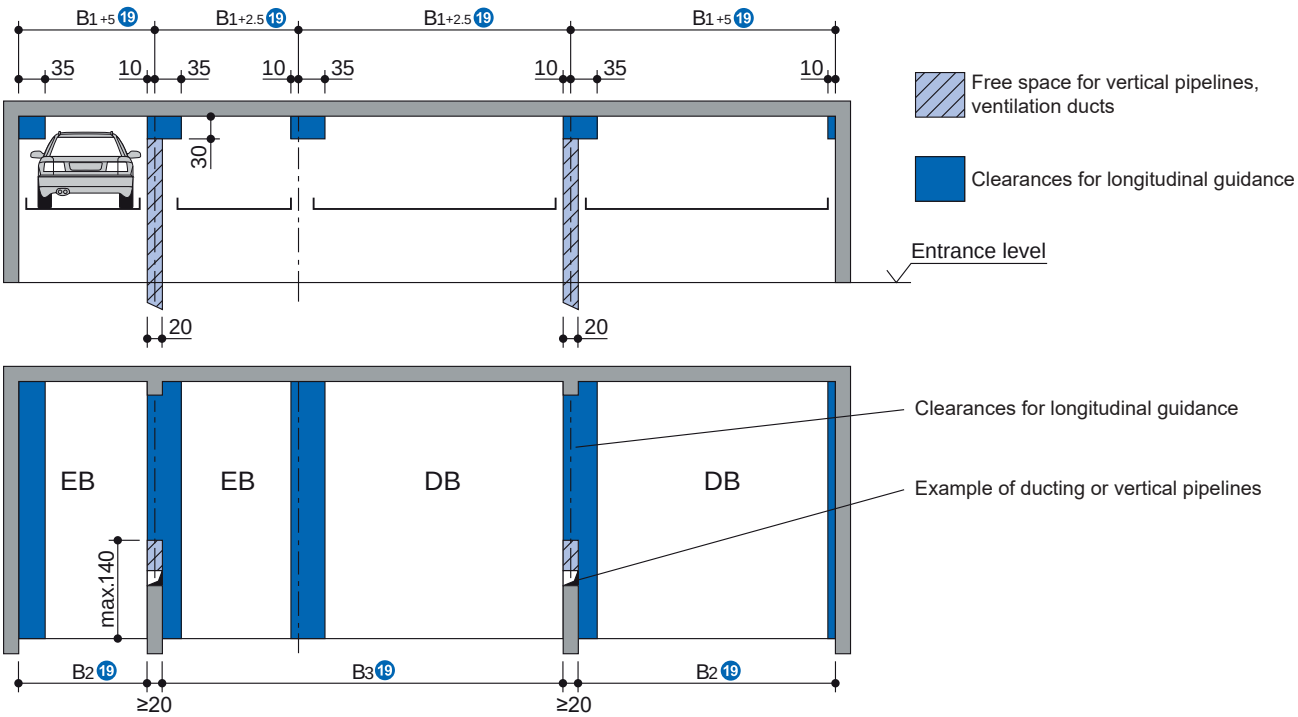

HINT : Free spaces apply only to forward parked cars with driver exit on the left side!

19 Dimensions B1, B2 and B3, see **"Width dimensions for garage without door"**, page 3.

Page 1 Sections, dimensions, car data
Page 2 Variants and Height dimensions
Page 3 Width dimensions
Page 4 Garage door dimensions
Page 5 Parking position, Approach, Wall clearance
Page 6 Load plan, Space for duct installation
Page 7 Installation data / electrical installation
Page 8 Technical hint
Page 9 Facilities from customer
Page 10 Description EB + DB

▶ Electrical installation

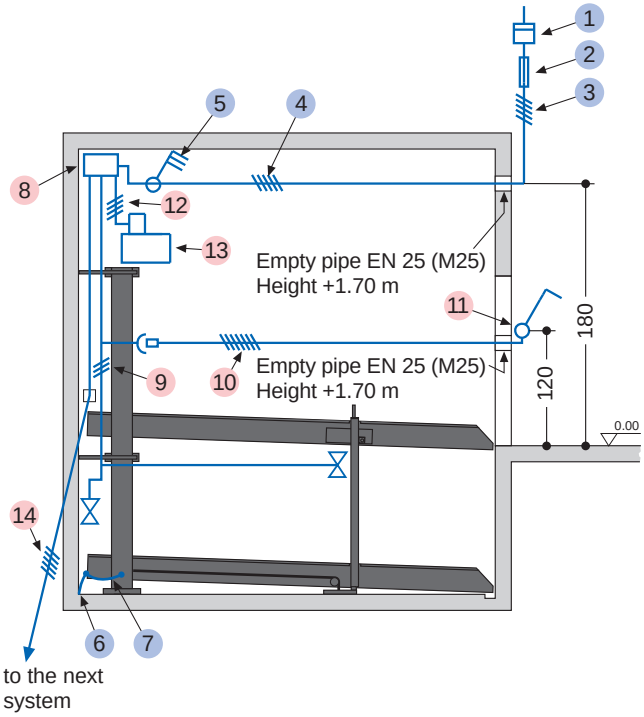

Electrical data to be performed by the customer

No.	Qty.	Description	Position	Frequency
1	1	Electricity meter	in the supply line	
2	1	Main fuse: 3 x fuse 16 A (slow) or circuit breaker 3 x 16 A (trigger characteristic K, G or C) 3 x fuse 20 A (slow) or circuit breaker 3 x 20 A (trigger characteristic K, G or C)	in the supply line in the supply line	1 per 3,0 kW unit 1 per 5,2 kW unit
3	1	Supply line 5 x 2.5 mm² (3 PH + N + PE) with marked wire and protective conductor	to main switch	1 per unit
4	1	Supply line 5 x 2,5 mm² (3 PH + N + PE) with marked wire and protective conductor	from main switch to unit	1 per unit
5	1	Lockable main switch	defined at the plan check	1 per unit
6	every 10 m	Foundation earth connector	corner pit floor	
7	1	Potential equalization from foundation grounding connection system according to DIN EN 60204		1 per system

Electrical data included in delivery of **Lödige Industries**

No.	Designation
8	Junction box unit
9	Control line 3 x 1 mm² (PH + N + PE)
10	Control line 4 x 1 mm² with marked wire and protective conductor
11	Operating device
12	Control line 4 x 2,5 mm² with marked wire and protective conductor
13	Hydraulic unit 3,0 kW / 5,2 kW, three phase current, 230/400 V, 50 Hz 20
14	Connection cable to the next system

20 Unit 5,2 kW only for S2.7-R

▶ Detail building construction – foundation hydraulic unit

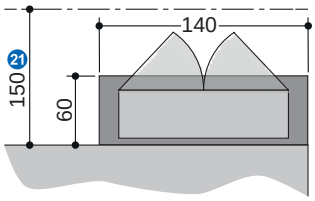

If the installation of the hydraulic power pack is not possible in adjacent room or building, the hydraulic power pack and the electrical components must be accommodated in a cabinet (at an additional cost).

The cabinet is to be planned in the rear area of the stack parker. For this purpose, a foundation (140 x 60 cm) made of concrete is required (concrete quality min. C20/C25). The cabinet is doweled into the floor. The drill hole depth is approx. 10 cm.

21 Free space

Page 1 Sections, dimensions, car data
Page 2 Variants and Height dimensions
Page 3 Width dimensions
Page 4 Garage door dimensions
Page 5 Parking position, Approach, Wall clearance
Page 6 Load plan, Space for duct installation
Page 7 Installation data / electrical installation
Page 8 Technical hint
Page 9 Facilities from customer
Page 10 Description EB + DB

Lödige Industries GmbH | Balhorner Feld 1 | 33106 Paderborn
Telefon: +49 5251 2980-0 | E-Mail: info@lodige.com
www.lodige.com

▶ Technical hint

Usage area
As a standard, the system is suitable for long-time car parking. Frequent usage of upper parking space (e.g., short-term parking in office buildings or hotels) requires structural modifications to the **swiss-park** system. Feel free to contact us for consultation.

Units
Low-noise hydraulic units mounted on Anti-vibration mounting plates are installed. But, we also recommend separating the garage body from the residential building. If it is not possible to install the hydraulic unit in adjacent buildings or rooms, the hydraulic unit and the electrical components must be housed in a cabinet (at an additional cost) (see **"Detail building construction – foundation hydraulic unit"**, page 7).

Railings
If the permissible drop opening is exceeded, railings are to be mounted on the systems. If there are traffic routes next to or behind the installations, railings compliant to DIN EN ISO 13857 must be installed by the customer. Railings must also be in place during construction.

CE certification
The systems offered correspond to DIN EN 14010 and the EC Machinery Directive 2006/42/EG.

Building application documents
According to LBO and GaVo (garage regulations), the **swiss-park** systems are subject to approval. Please observe the local rules and regulations.

Available documents
- Wall recess plans
- Maintenance offer/contract
- Declaration of conformity

Environmental conditions
Ambient conditions for the areas around stack parker systems:

- Temperature range -10 °C to +40 °C
- Relative humidity of 50% at a maximum outside temperature of +40 °C.

The lifting and lowering of the stack parker systems are calculated at an ambient temperature of +10 °C and with the hydraulic system positioned immediately adjacent to the stack parker. The operating time of stack parker increases at lower ambient temperatures or with longer hydraulic lines.

Care & Protection
To avoid corrosion damage, please follow separate cleaning and care instructions (as per the **"Corrosion protection"** sheet) and ensure that your garage is well ventilated.

Noise protection
Standard noise protection:
As per DIN 4109-1 (Sound insulation in buildings – Part 1: Minimum requirements) - Section 9:
- Maximum noise level in living and sleeping areas 30 dB (A).

Noise created by users are not considered.

The following dimensions are required for adherence to this value:
- Noise protection package in accordance with quote/order (**Lödige Industries**).
- Noise insulation dimension of the building structure of minimum weighted sound reduction index, min. R'w = 57 dB (service to be provided by the customer)

Increased noise protection (special agreement):
As per DIN 4109-5 (Sound insulation in buildings - Part 5: Increased requirements) - Section 8:
- Maximum noise pressure level in living and sleeping areas 25 dB (A).

Noise created by users are not considered.

The following dimensions are required for adherence to this value:
- Noise protection package in accordance with quote/order (**Lödige Industries**).
- Noise insulation dimension of the building structure of min. R'w = 62 dB (service to be provided by the customer)

HINT : User noises are the noises that can be influenced by individual users of our **swiss-park** systems. These are created during the accessing of the platform, slamming of vehicle doors, engine, and brake noise.

Page 1 Sections, dimensions, car data
Page 2 Variants and Height dimensions
Page 3 Width dimensions
Page 4 Garage door dimensions
Page 5 Parking position, Approach, Wall clearance
Page 6 Load plan, Space for duct installation
Page 7 Installation data / electrical installation
Page 8 Technical hint
Page 9 Facilities from customer
Page 10 Description EB + DB

Lödige Industries GmbH | Balhorner Feld 1 | 33106 Paderborn
Telefon: +49 5251 2980-0 | E-Mail: info@lodige.com
www.lodige.com

▶ Facilities to be provided by the customer

Safety barriers
During the stack parker construction, in accordance with DIN EN ISO 13857, safety barriers are to be placed immediately in front of, adjacent to, or behind the systems where there are roadways.

Parking space numbering
Parking space numbering, if required.

Building services
Ventilation, fire extinguishing and fire alarm systems, as well as clarification and compliance with the relevant regulatory requirements.

Lighting
The customer must observe local regulations pertaining to the illumination of parking spaces and roadways. In accordance with DIN EN 12464-1 'Light and lighting - Lighting of work places', an illumination level of min. 200 lx is recommended for the parking spaces and operating area of the system.

Drainage
For the front area of the pit, we recommend a drainage channel, which you connect to a floor drain system or sump (50 x 50 x 20 cm). The drainage channel may be inclined to the side, however not the pit floor itself (longitudinal incline is available). For reasons of environmental protection, we recommend painting the pit floor, and to provide oil and petrol separators in the connections to the public sewage network.

Warning labels
In accordance with DIN EN 14010, the customer must provide 10 cm wide, yellow/black marking in accordance with DIN ISO 3864 in the access area in front of the contact area of the upper platform edge to identify the hazard area (see **"Load plan"**, Page 6)

Wall cutout
Any necessary wall cutout according to page 1.

Electrical supply to the main switch / Foundation earth connector
The customer must lay the supply cable to the master switch during assembly. Functional capability can be checked by our engineers on site, in conjunction with the electrical engineer. If this is not possible during assembly for reasons attributable to the customer, the customer must commission an electrical engineer.

The customer must earth the steel structure with a foundation earth connection (earthing distance max. 10 m) and equipotential bonding in accordance with DIN EN 60204 (see **"Electrical installation"**, page 7)

Control panel
Empty conduits and recesses for the operating element (see **"Electrical installation"**, page 7). Consultation with **Lödige Industries** is required when using folding doors.

Control panel on plaster

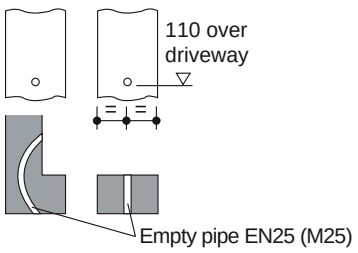

Control panel under plaster

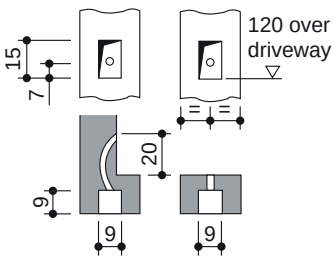

Other services on-site
- Preparation of the stack parker pit
- Measures for the implementation of water protection regulations
- Measures to comply with fire protection regulations and noise protection in accordance with DIN4109
- Pit measurement
- Daily update on project photos, if required.
- Foundation grounding if necessary
- All permits and approvals

If the following are not included in the quotation, they will also have to be provided/paid for by the customer:
- Mounting of contactor and terminal box to the wall valve, complete wiring of all elements in accordance with the circuit diagram
- Costs for final technical approval by an authorized body
- Main switch
- Control line from the main switch to the hydraulic unit
- Railing
- Floor marking

Page 1 Sections, dimensions, car data
Page 2 Variants and Height dimensions
Page 3 Width dimensions
Page 4 Garage door dimensions
Page 5 Parking position, Approach, Wall clearance
Page 6 Load plan, Space for duct installation
Page 7 Installation data / electrical installation
Page 8 Technical hint
Page 9 Facilities from customer
Page 10 Description EB + DB

Lödige Industries GmbH | Balhorner Feld 1 | 33106 Paderborn
Telefon: +49 5251 2980-0 | E-Mail: info@lodige.com
www.lodige.com

▶ Description - Single platform (EB) and Double platform (DB)

General description

- **swiss-park** systems are for independent parking of 2 cars (EB), 2x2 cars (DB) on top of each other.
- Dimensions according to the underlying pit, width and height dimensions
- The upper parking bays are accessed inclined (approx. 2° ascending slope). The lower parking bays are accessed inclined (approx. 8°descending slope). Installation deviation ± 1%.
- By special arrangement of the lifting and supporting structure, the opening of the doors is not restricted.
- Passenger car positioning on each parking space by means of a positioning aid mounted on the right-hand side (to be set in accordance with the operating instructions).
- Operation via a control element with automatic reset by means of a key that closes the same way.
- Fixing the control element usually in front of the support or on the way revealing the outside.
- Operating instructions at every operating point.
- For garages with an entrance door, special dimensions must be respected.

swiss-park system consisting of:

- 2 Pillars with foundation rails (fixed to the floor)
- 2 Sliding pieces (with sliding guides attached to the pillars)
- 2 Platforms
- 1 mechanical synchronization system (for the synchronous operation of the hydraulic cylinders during lifting and lowering)
- 2 Hydraulic cylinders
- 2 rigid supports (connection of the platforms)
- 1 automatic hydraulic breakage protection (prevents involuntary lowering when driving on)
- Dowels, screws, fasteners, connecting elements etc.

Platform consisting of:

- Platform profiles
- Adjustable positioning aids
- Bevelled bumpers
- Lateral beams
- Bearing center [DB only]
- Brackets
- Screws, nuts, spacer tubes, etc.

Hydraulics consisting of:

- Hydraulic cylinder
- Solenoid valve
- Safety valves
- Hydraulic lines
- Hydraulic fittings
- High-pressure hoses
- Mounting material

Electrical system consisting of:

- Operating element (Emergency-stop, lock, 1 master key per parking space)
- Junction box unit
- Control cabinet

Hydraulic unit consisting of:

- Hydraulic unit (low noise, installed onto a console with a rubber-bonded-to-metal mounting)
- Hydraulic oil tank
- Oil filling
- Internal gear pump
- Pump holder
- Coupling
- Three-phase motor (3.0 kW / 5.2 kW, 230/400 V, 50 Hz)
- Pressure gauge
- Pressure relief valve
- Hydraulic hoses (to reduce noise transmission to the hydraulic pipes)

We reserve the right to change these specifications without notice!

Lödige Industries reserves the right, in the course of technical and technological progress, to use newer or different technologies, systems, processes, procedures, or standards than those originally offered and ensure that the customer does not incur any disadvantage.

Page 1 Sections, dimensions, car data
Page 2 Variants and Height dimensions
Page 3 Width dimensions
Page 4 Garage door dimensions
Page 5 Parking position, Approach, Wall clearance
Page 6 Load plan, Space for duct installation
Page 7 Installation data / electrical installation
Page 8 Technical hint
Page 9 Facilities from customer
Page 10 Description EB + DB

SWISS-PARK

A LÖDIGE INDUSTRIES COMPANY